Work Order ID 61370

Friday, August 20, 2010 3:45:49 PM

Item ID: D3691-1 **Accept** **Setup Start**

Revision ID: **Stop**

Item Name: STUD

Start Date: 8/23/2010 **Start Qty:** 16.00 **Cust Item ID:**

Required Date: 8/30/2010 **Req'd Qty:** 16.00 **Customer:**

Reference:

Approvals: **Process Plan:** CNUF **Date:** 10-8-20 **Tooling:** _____ **Date:** _____ **Run Start**

QC: _____ **Date:** _____ **SPC (Y/N):** _____ **Date:** _____ **Stop**

Sequence ID/ Work Center ID	Operation Description	Set Up/ Run Hours	Tool ID	Tool #	Plan Code	Accept Qty	Reject Qty	Reject Number	Insp. Stamp
Draw Nbr	**Revision Nbr**								
D3691	Rev D								
100	BAND SAW	0.00				16	∅		
Bandsaw	**Memo**	0.00							
Jeaspa Bandsaw	***DO NOT USE CHOP SAW***	☐ Cut blank 7.750" long				SL 10/08/20			
110	DOOSAN LATHE	0.00				16	∅		
Doosan	**Memo**	0.00							
Doosan Lathe	1-Turn as per Folio FA716 Rev: AA & Dwg D3691 Rev: D ☐2-Deburr per dwg D3691 3-Check .625" bore with DT9530 GO/NO GO Gauge					SL / 10-9-9			
160	QC2- Inspect parts off machine FAI/FAIB	0.00				16	∅		
QC	**Memo**	0.00							
Quality Control		10-9-9							

Dart Aerospace Ltd

W/O:		WORK ORDER CHANGES					
DATE	STEP	PROCEDURE CHANGE	By	Date	Qty	Approval Chief Eng / Prod Mgr	Approval QC Inspector

Part No: _____ **PAR #:** _____ **Fault Category:** _____ **NCR:** Yes No **DQA:** _____ **Date:** _____

Resolution: _____ **Disposition:** _____ **QA: N/C Closed:** _____ **Date:** _____

NCR:		WORK ORDER NON-CONFORMANCE (NCR)						
DATE	STEP	Description of NC Section A	Corrective Action Section B			Verification Section C	Approval Chief Eng	Approval QC Inspector
			Initial Chief Eng	Action Description Chief Eng	Sign & Date			

NOTE: Date & initial all entries

H:\fFORMS\Quality Assurance\approved QA\NCRWO RevE

Work Order ID 61370

Friday, August 20, 2010 3:45:49 PM

Item ID: D3691-1 **Accept** **Setup Start**

Revision ID: **Stop**

Item Name: STUD

Start Date: 8/23/2010 **Start Qty:** 16.00 **Cust Item ID:**

Required Date: 8/30/2010 **Req'd Qty:** 16.00 **Customer:**

Reference:

Approvals: **Process Plan:** _____ **Date:** _____ **Tooling:** _____ **Date:** _____ **Run Start**

QC: _____ **Date:** _____ **SPC (Y/N):** _____ **Date:** _____ **Stop**

Sequence ID/ Work Center ID	Operation Description	Set Up/ Run Hours	Tool ID	Tool #	Plan Code	Accept Qty	Reject Qty	Reject Number	Insp. Stamp
170	QC8- Inspect parts - second check	0.00				16	ø		
QC	**Memo**	0.00							
Quality Control									
171		0.00							
Purchasing	**Memo**	0.00							
Purchasing	Liquid Penetrant Inspection as per QSI 038 Issue P/O: 12653 LPI as per dwg D3691 Attach copy of NDT results to work order								
173	Receive & Inspect for Damage & Mat'l Certs	0.00							
Packaging	**Memo**	0.00							
Packaging									

Dart Aerospace Ltd

W/O:		WORK ORDER CHANGES					
DATE	STEP	PROCEDURE CHANGE	By	Date	Qty	Approval Chief Eng / Prod Mgr	Approval QC Inspector

Part No: _____ **PAR #:** _____ **Fault Category:** _____ **NCR:** Yes No **DQA:** _____ **Date:** _____

Resolution: _____ **Disposition:** _____ **QA: N/C Closed:** _____ **Date:** _____

NCR:		WORK ORDER NON-CONFORMANCE (NCR)						
DATE	STEP	Description of NC Section A	Corrective Action Section B			Verification Section C	Approval Chief Eng	Approval QC Inspector
			Initial Chief Eng	Action Description Chief Eng	Sign & Date			

NOTE: Date & initial all entries

Work Order ID 61370

Friday, August 20, 2010 3:45:49 PM

Item ID: D3691-1 **Accept** **Setup Start**

Revision ID: **Stop**

Item Name: STUD

Start Date: 8/23/2010 **Start Qty:** 16.00 **Cust Item ID:**

Required Date: 8/30/2010 **Req'd Qty:** 16.00 **Customer:**

Reference:

Approvals: **Process Plan:** _____ **Date:** _____ **Tooling:** _____ **Date:** _____ **Run Start**

QC: _____ **Date:** _____ **SPC (Y/N):** _____ **Date:** _____ **Stop**

Sequence ID/ Work Center ID	Operation Description	Set Up/ Run Hours	Tool ID	Tool #	Plan Code	Accept Qty	Reject Qty	Reject Number	Insp. Stamp
175	QC5- Inspect part completeness to step on W/O	0.00				MN	10	09	29 (16)
QC	Memo	0.00							
Quality Control									
180	Identify as per dwg & Stock Location: 77	0.00				10/9/29			160
Packaging	Memo	0.00							
Packaging									
190	QC21- Final Inspection - Work Order Release	0.00					10	09/30	
QC	Memo	0.00							
Quality Control									

MF 10-9-29

Dart Aerospace Ltd

W/O:		WORK ORDER CHANGES					
DATE	STEP	PROCEDURE CHANGE	By	Date	Qty	Approval Chief Eng / Prod Mgr	Approval QC Inspector

Part No: _____ **PAR #:** _____ **Fault Category:** _____ **NCR:** Yes No **DQA:** _____ **Date:** _____

Resolution: _____ **Disposition:** _____ **QA: N/C Closed:** _____ **Date:** _____

NCR:		WORK ORDER NON-CONFORMANCE (NCR)						
DATE	STEP	Description of NC Section A	Corrective Action Section B			Verification Section C	Approval Chief Eng	Approval QC Inspector
			Initial Chief Eng	Action Description Chief Eng	Sign & Date			

NOTE: Date & initial all entries

H:\fFORMS\Quality Assurance\approved QA\NCRWO RevE

Picklist Print

Friday, August 20, 2010 3:45:48 PM

Work Order ID: 61370

Parent Item: D3691-1

Parent Item Name: STUD

Start Date: 8/23/2010 **Required Date:** 8/30/2010

Start Qty: 16.00 **Required Qty:** 16.00

Comments:
IPP Rev:A New Issue 08-01-29 JLM Veriified By:EC
IPP Rev:B Material Change 09-01-07 JLM Verified By:EC IPP
REV:C AS PER REV D 10-03-16 JLM VERIFIED BY:EC
IPP Rev:C Added note on Step 2 09-01-26 JLM Verified By:EC

Component Item ID/ Item Name	Replacement Item ID	Mfg/ Purch	Bin Item	Primary Location	Last Location	Route Seq ID	Unit of Measure	Qty on Hand	Qty per Kit	Total Qty	Qty Issued	Date Issued	Status
M174PH-H900R1.000 17-4SS H900 ROUND BAR 1.00		Purchased	No				f	26.8000	0.73	11.68584			

Location	Loc Qty	Loc Code
MAT030	26.8	
112570	26.8	

10.9.9

- 10.18

Dart Aerospace Ltd

W/O:		WORK ORDER CHANGES					
DATE	STEP	PROCEDURE CHANGE	By	Date	Qty	Approval Chief Eng / Prod Mgr	Approval QC Inspector

Part No: _____ **PAR #:** _____ **Fault Category:** _____ **NCR:** Yes No **DQA:** _____ **Date:** _____

Resolution: _____ **Disposition:** _____ **QA: N/C Closed:** _____ **Date:** _____

NCR:		WORK ORDER NON-CONFORMANCE (NCR)						
DATE	STEP	Description of NC Section A	Corrective Action Section B			Verification Section C	Approval Chief Eng	Approval QC Inspector
			Initial Chief Eng	Action Description Chief Eng	Sign & Date			

NOTE: Date & initial all entries

H:\fFORMS\Quality Assurance\approved QA\NCRWO RevE

DART AEROSPACE LTD	Work Order:	61370
Description: Stud	Part Number:	D3691-1
Inspection Dwg: D3691 Rev: D		Page 1 of 1

FIRST ARTICLE INSPECTION CHECKLIST

[X] First Article [ ] Prototype

Drawing Dimension	Tolerance	Actual Dimension	Accept	Reject	Method of Inspection	Comments
Ø0.695	+/-0.010	.695	/			
45°	0.5°	45°	/			
0.625	+0.004/-0.000	.626	/			
1.25	+0.000/-0.03	1.240	/			
118°	0.5°	118°	/			
R0.03	+/-0.030	R.03	/			
0.11 Ref	+/-0.030	.11	/			
90°	0.5°	90°	/			
Ø0.189	+0.005/-0.001	Ø.190	/			
1.31	+/-0.030	1.31	/			
1.65	+/-0.030	1.65	/			
0.750	+0.000/-0.010	.750	/			
Ø0.659	+0.000/-0.015	Ø.651	/			
7.625	+/-0.015	7.635	/			
2.90	+/-0.030	2.90	/			
3/4-16UNF-2A	N/A	3/4-16UNF	/			
0.075 x 45°	+/-0.010 x 0.5°	.075 x 45°	/			
0.375	+0.000/-0.010	.375	/			
Ø0.189	+0.005/-0.001	Ø.190	/			
R0.25	+/-0.030	R.25	/			
R0.50	+/-0.030	R.50	/			

Measured by:	SA	Audited by:	DJP	Prototype Approval:	N/A
Date:	10/08/24	Date:	10/09/24	Date:	N/A

Rev	Date	Change	Revised by	Approved
A	09.05.11	New Issue	KJ	
B	09.11.04	Dwg Rev updated	KJ	
C	10.03.31	Dimensions revised per Dwg Rev D	KJ	

Dart Aerospace Ltd

W/O:		WORK ORDER CHANGES					
DATE	STEP	PROCEDURE CHANGE	By	Date	Qty	Approval Chief Eng / Prod Mgr	Approval QC Inspector

Part No: _____ **PAR #:** _____ **Fault Category:** _____ **NCR:** Yes No **DQA:** _____ **Date:** _____

Resolution: _____ **Disposition:** _____ **QA: N/C Closed:** _____ **Date:** _____

NCR:		WORK ORDER NON-CONFORMANCE (NCR)						
DATE	STEP	Description of NC Section A	Corrective Action Section B			Verification Section C	Approval Chief Eng	Approval QC Inspector
			Initial Chief Eng	Action Description Chief Eng	Sign & Date			

NOTE: Date & initial all entries

H:\fFORMS\Quality Assurance\approved QA\NCRWO RevE

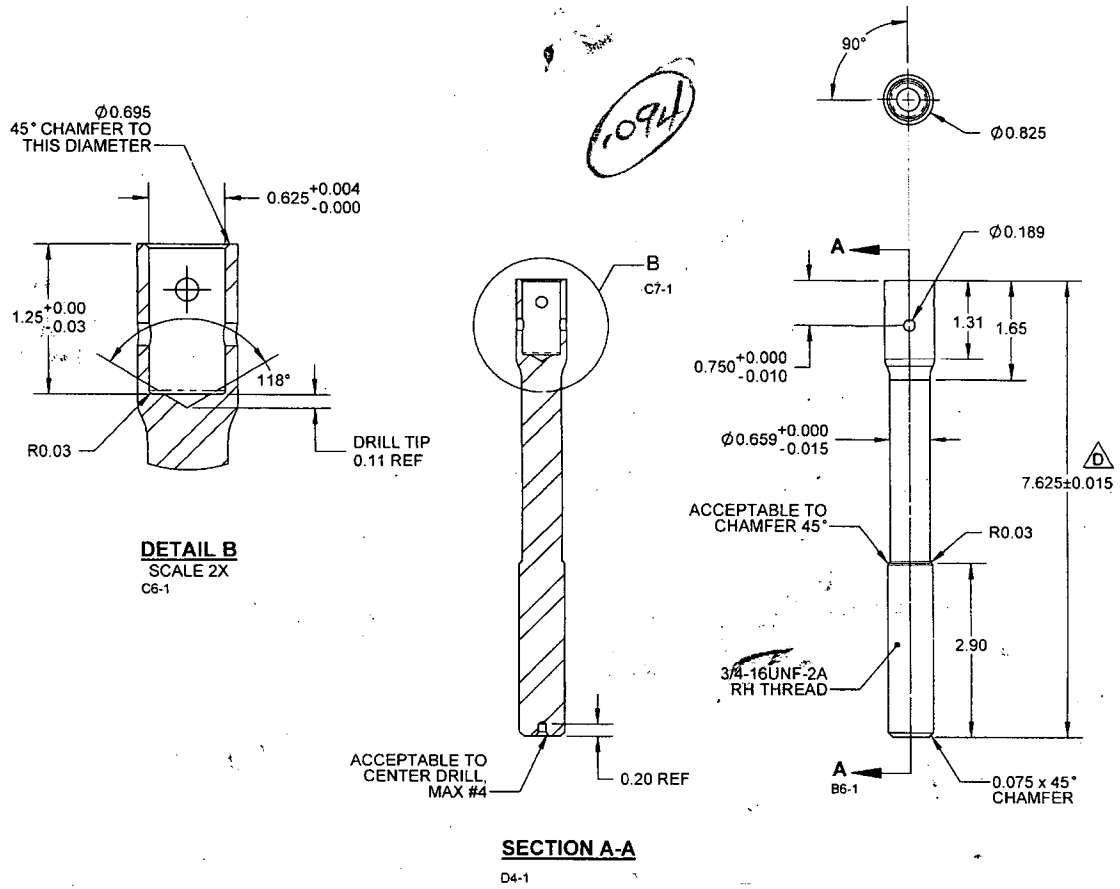

.094

#61370

RELEASED
2010 -03- 15

D3691-1 STUD

NOTES:
1) MATERIAL: 17-4PH STAINLESS STEEL ROUND BAR PER AMS 5643 H-900 CONDITION
2) FINISH: NONE
3) TOLERANCES: PER DART QSI 018 UNLESS OTHERWISE NOTED
4) UNITS: INCHES UNLESS OTHERWISE NOTED
5) BREAK SHARP EDGES: 0.005 TO 0.010 MAX
6) IDENTIFICATION: NONE
7) WEIGHT: 0.81 lb
8) LPI PER QSI 038 4.1.1 (ASTM E1417 LEVEL 2)

REV.	DESCRIPTION	BY	DATE
D	7.625 WAS 7.750 (ZN C4-1)	RF	10.03.03
C	0.20 WAS 0.16 & CENTER DRILL #4 WAS CENTER DRILL #2 (ZNB6-1); UPDATE NOTE 8 TO REF QSI (ZN A8-1)	RF	09.09.09
B	CHANGE TO 17-4PH H-900(ZN A8-1); Ø0.695 WAS Ø0.665 (ZN D8-1); REFORMATTED TO CURRENT DWG STANDARDS	RF	08.11.24
A	NEW ISSUE	RF	08.03.12

DESIGN	RF	DART AEROSPACE LTD HAWKESBURY, ONTARIO, CANADA
DRAWN	RF	
CHECKED		DRAWING NO. D3691 — REV. D — SHEET 1 OF 1
MFG. APPR.		
APPROVED		TITLE STUD — SCALE NTS
DE APPR.		
DATE	10.03.03	

Dart Aerospace Ltd

W/O:		WORK ORDER CHANGES					
DATE	STEP	PROCEDURE CHANGE	By	Date	Qty	Approval Chief Eng / Prod Mgr	Approval QC Inspector

Part No: _____ **PAR #:** _____ **Fault Category:** _____ **NCR:** Yes No **DQA:** _____ **Date:** _____

Resolution: _____ **Disposition:** _____ **QA: N/C Closed:** _____ **Date:** _____

NCR:		WORK ORDER NON-CONFORMANCE (NCR)						
DATE	STEP	Description of NC Section A	Corrective Action Section B			Verification Section C	Approval Chief Eng	Approval QC Inspector
			Initial Chief Eng	Action Description Chief Eng	Sign & Date			

NOTE: Date & initial all entries

H:\fFORMS\Quality Assurance\approved QA\NCRWO RevE

ACUREN

LIQUID PENETRANT TEST REPORT

P- 15194

PAGE 1 OF 1

CLIENT: DART AEROSPACE
DATE: SEPT-28-2010
TIME: AM ☑ PM ☐
ATTENTION: LINDA/CHANTEL
ACUREN JOB NO.: 188-10-0895
ADDRESS: 1270 ABERDEEN HAWKESBURY ONT.
PO/WO NO.: 12653 —
WORK LOCATION: HAWKESBURY PLANT
ACCEPTANCE STD. ASTM 1417 REV./DATE 2005
PROJECT: F.P.I. ON CROSS TUBES AND MACHINED PARTS.
ITEM(S) EXAMINED: (4) CROSS TUBES. (16) - STUDS

JOB DESCRIPTION | PROCEDURE NO. LT-0002 REV./DATE — | TECHNIQUE NO. LT-TEH2 REV./DATE —

PART NO. —
MATERIAL STAINLESS STEEL ~~THICKNESS~~ ALUMINE ALUMINUM
SCOPE: WET FLOURESCENT LIQUID PENETRANT INSPECTION CARRIED OUT ON 100% EXTERNAL SURFACE

TEST DETAILS

METHOD	☑ FLUORESCENT ☐ VISIBLE	☑ WATER WASH ☐ SOLVENT REMOVABLE ☐ POST EMULSIFIED	
FAMILY BRAND	MAGNAFLUX	BLACK LIGHT S/N 16459 ☐ OUTPUT > 1000 μ W/CM² ☐ AMBIENT < 2 fc	
PENETRANT	ZL 07	MINIMUM DWELL TIME 45/10 MIN.	LIGHTING EQUIP. ☐ FLASHLIGHT ☐ TROUBLELIGHT ☐ OUTPUT>100 fc @ SURFACE
PENETRANT REMOVER	420	MINIMUM DRY TIME >10 MIN.	OTHER LABINO
DEVELOPER	SKD S2	MINIMUM DWELL TIME 10 MIN.	LIGHT METER S/N 1098866 CAL DUE DATE OCT 19 2010
DEVELOPER TYPE	☑ NON AQUEOUS ☐ AQUEOUS ☐ DRY		

TEST SURFACE

SURFACE CONDITION	☐ AS GROUND	☐ AS WELDED	☑ MACHINED	☐ SHOT BLASTED	☑ CLEAN BARE METAL
SURFACE TEMPERATURE	☐ < - 4°C/ 20°F	☐ - 4°C/ 20°F TO 10°C/50°F	☑ 10°C/50°F TO 52°C/125°F	☐ > 52°C/125°F	

RESULTS- (☐ ~~METRIC~~ ☐ ~~IMPERIAL~~)

16 - STUDS - W.O. 61370 ✓
1 - CROSS TUBE - W.O. 62045 ✓
1 - CROSS TUBE - W.O. 61370 ✓
1 - CROSS TUBE - W.O. 61852 ✓
1 - CROSS TUBE - W.O. 61853 ✓

SEE PREVIOUS F.P.I. REPORT # 15193 IN REGARDS TO - CROSS TUBES - W.O. 61852 - W.O. 61853...

10.09.29

SIGNATURES

CLIENT REPRESENTATIVE: MATHEW MURDOCH (PRINT) — SIGNATURE
DTR # E-63393
TECHNICIAN (SIGNATURE):
REPORT REVIEWED BY:
NAME (PRINT): MIKE JOHNSTON
1ST TECHNICIAN — 2ND TECHNICIAN
CGSB LEVEL II SNT LEVEL — CGSB LEVEL — SNT LEVEL —
CGSB REG. NO 6606 — CGSB REG. NO —
NAME — INITIALS

WHITE – CLIENT COPY CANARY – OFFICE COPY PINK – TECHNICIAN COPY GOLD – OFFICE COPY

PT Sept 2005